SPN2316
N-Channel Enhancement Mode MOSFET

DESCRIPTION

The SPN2316 is the N-Channel enhancement mode power field effect transistors are produced using high cell density , DMOS trench technology. This high density process is especially tailored to minimize on-state resistance and provide superior switching performance. These devices are particularly suited for low voltage applications such as notebook computer power management and other battery powered circuits where high-side switching, low in-line power loss, and resistance to transients are needed.

APPLICATIONS

- Power Management in Note book
- Portable Equipment
- Battery Powered System
- DC/DC Converter
- Load Switch
- DSC
- LCD Display inverter

FEATURES

- N-Channel
  30V/3.4A,$R_{DS(ON)}$=60mΩ@V_{GS}=10V
  30V/2.7A,$R_{DS(ON)}$=70mΩ@V_{GS}=4.5V
  30V/1.0A,$R_{DS(ON)}$=100mΩ@V_{GS}=2.5V
- Super high density cell design for extremely low $R_{DS(ON)}$
- Exceptional on-resistance and maximum DC current capability
- ESD protected
- SOT-23 package design

PIN CONFIGURATION(SOT-23)

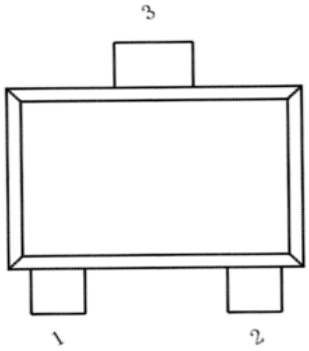

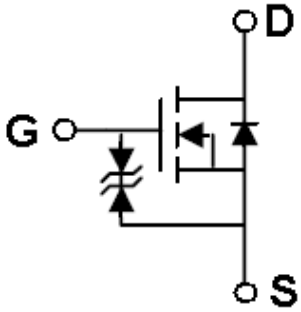

PART MARKING

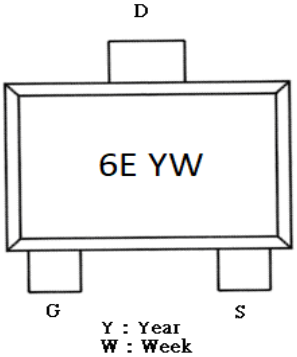

SPN2316
N-Channel Enhancement Mode MOSFET

PIN DESCRIPTION

Pin	Symbol	Description
1	G	Gate
2	S	Source
3	D	Drain

ORDERING INFORMATION

Part Number	Package	Part Marking
SPN2316S23RGB	SOT-23	6E

※ SPN2316S23RGB : Tape Reel ; Pb – Free ; Halogen – Free ; 3K/Reel
※ Week Code : A ~ Z(1 ~ 26) ; a ~ z(27 ~ 52)

ABSOULTE MAXIMUM RATINGS

(T_A=25℃ Unless otherwise noted)

Parameter		Symbol	Typical	Unit
Drain-Source Voltage		V_{DSS}	30	V
Gate –Source Voltage		V_{GSS}	±12	V
Continuous Drain Current(T_J=150℃)	T_A=25℃	I_D	3.8	A
Pulsed Drain Current		I_{DM}	15	A
Power Dissipation	T_A=25℃	P_D	1.39	W
Operating Junction Temperature		T_J	-55/150	℃
Storage Temperature Range		T_{STG}	-55/150	℃
Thermal Resistance-Junction to Ambient		$R_{\theta JA}$	90	℃/W

ELECTRICAL CHARACTERISTICS

(T_A=25℃ Unless otherwise noted)

Parameter	Symbol	Conditions	Min.	Typ	Max.	Unit
Static						
Drain-Source Breakdown Voltage	$V_{(BR)DSS}$	V_{GS}=0V,I_D= 250uA	30			V
Gate Threshold Voltage	$V_{GS(th)}$	V_{DS}=V_{GS},I_D=250uA	0.6		1.5	
Gate Leakage Current	I_{GSS}	V_{DS}=0V,V_{GS}=±10V			±10	uA
Zero Gate Voltage Drain Current	I_{DSS}	V_{DS}= 24V,V_{GS}=0V			1	uA
		V_{DS}= 24V,V_{GS}=0V T_J=55℃			10	
Drain-Source On-Resistance	$R_{DS(on)}$	V_{GS}=10V,I_D=3.4A		48	60	mΩ
		V_{GS}=4.5V,I_D=2.7A		54	70	
		V_{GS}=2.5V,I_D=1A		75	100	
Diode Forward Voltage	V_{SD}	I_S=3.4A,V_{GS}=0V			1.2	V
Dynamic						
Total Gate Charge	Q_g	V_{DS}=15V,V_{GS}=4.5V, I_D=2.1A		4.5		nC
Gate-Source Charge	Q_{gs}			1.4		
Gate-Drain Charge	Q_{gd}			1.3		
Input Capacitance	C_{iss}	V_{DS}=15V_{GS}=0V f=1MHz		249		pF
Output Capacitance	C_{oss}			27		
Reverse Transfer Capacitance	C_{rss}			20		
Turn-On Time	$t_{d(on)}$	V_{DD}=15V,R_L=4.4Ω , I_D=3.4A V_{GEN}=10V,R_G=6Ω		10.4		nS
	t_r			47.5		
Turn-Off Time	$t_{d(off)}$			70.1		
	t_f			62.3		

TYPICAL CHARACTERISTICS

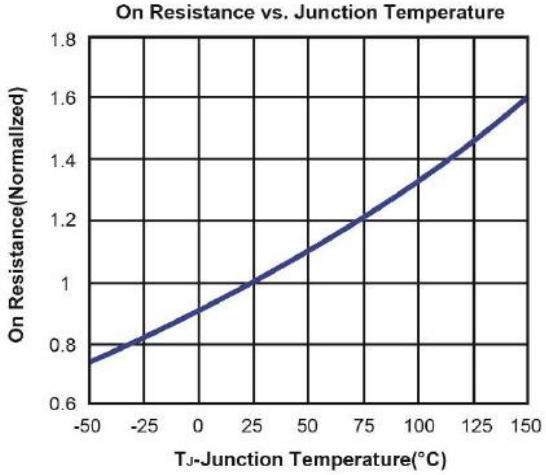

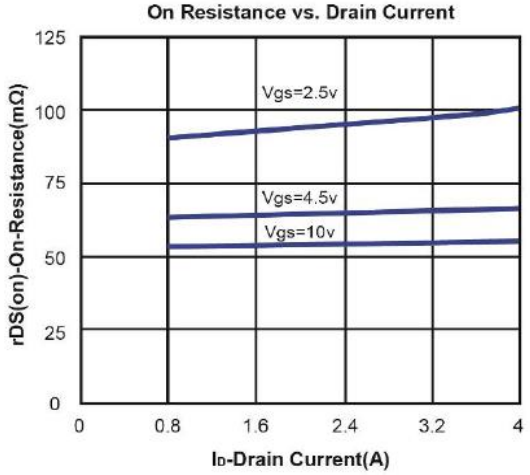

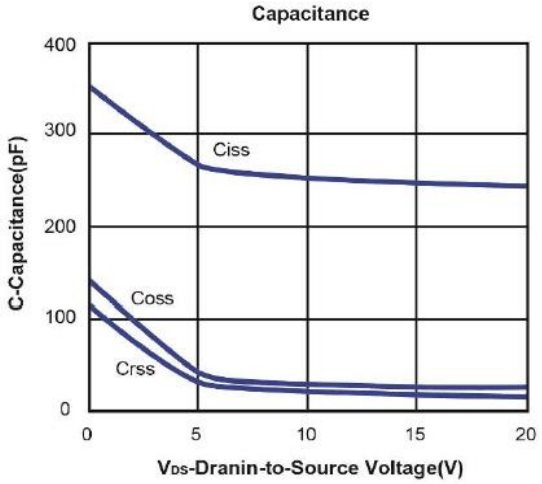

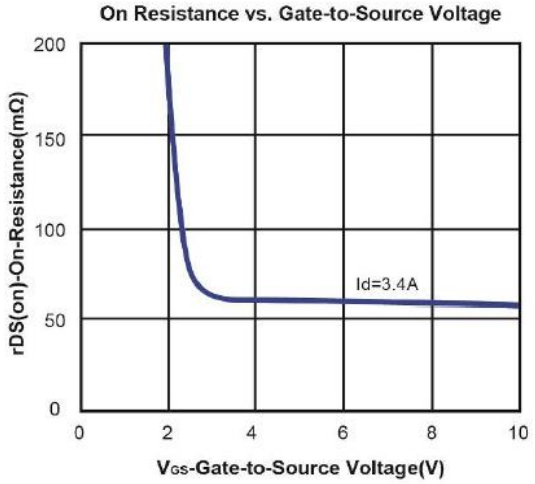

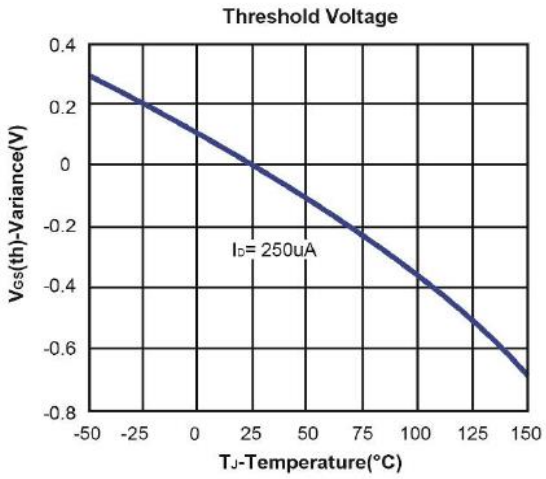

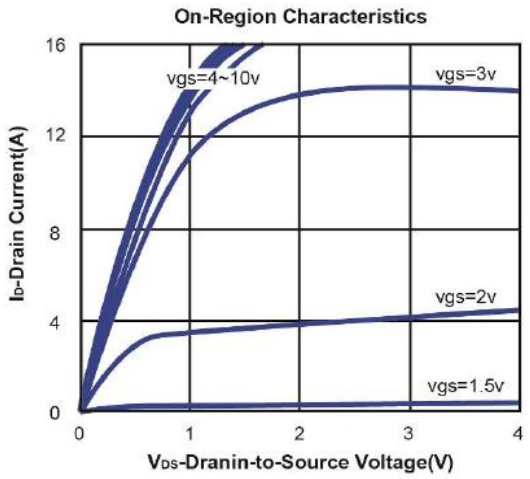

TYPICAL CHARACTERISTICS

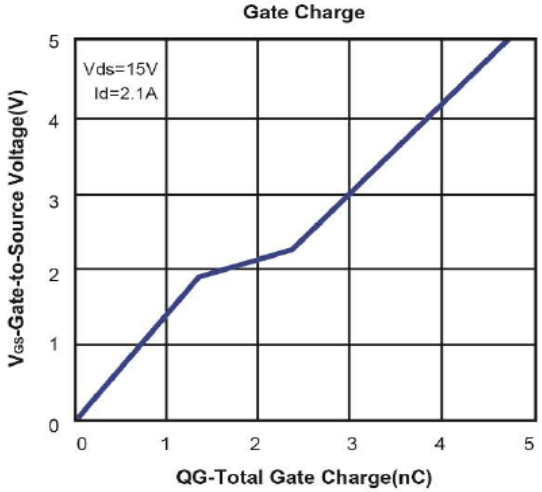

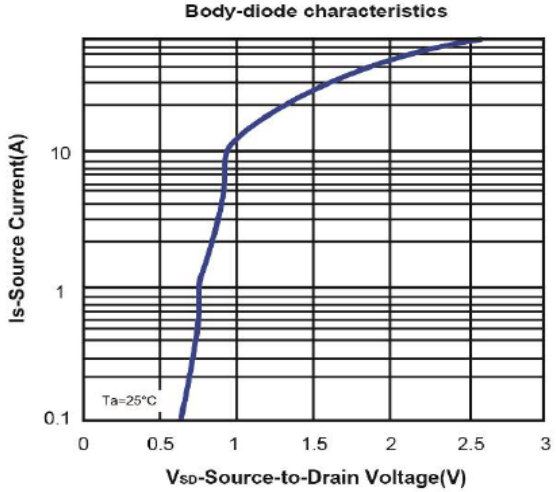

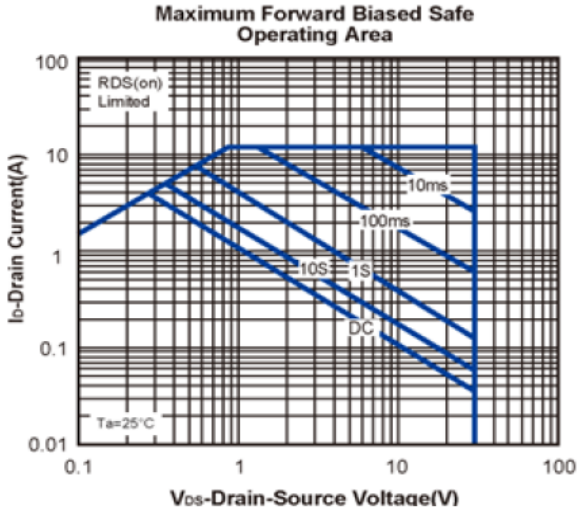

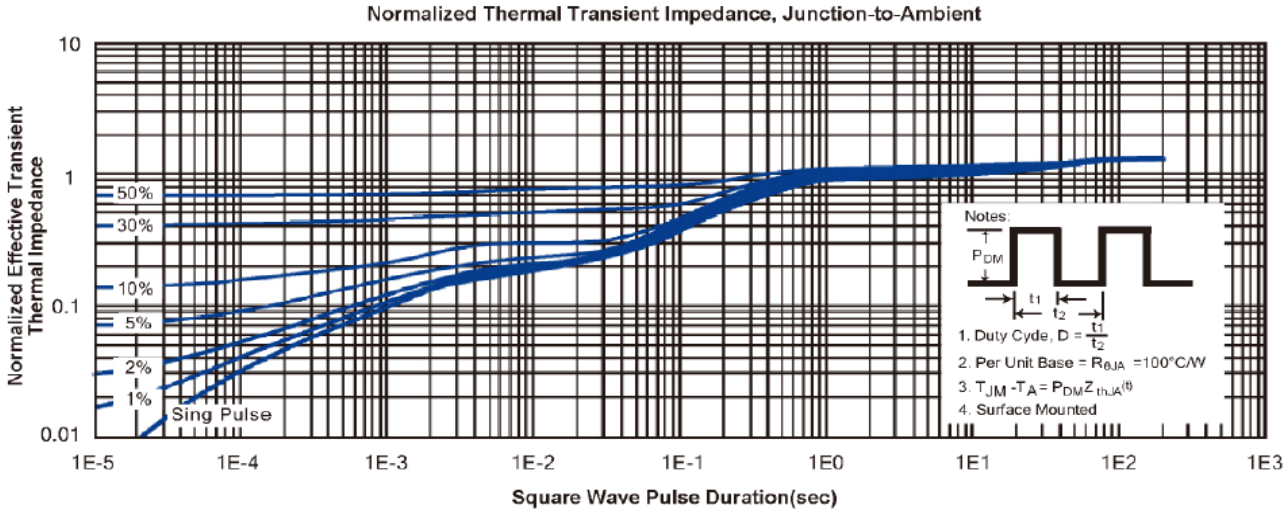

SYNC Power Corporation
7F-2, No.3-1, Park Street
NanKang District (NKSP), Taipei, Taiwan 115
Phone: 886-2-2655-8178
Fax: 886-2-2655-8468
© http://www.syncpower.com